Step 1 Adventure Carrier Install Instructions





Step by step on how to install the Adventure Carrier. Please read all steps carefully before starting the install.

Installation Video: https://www.youtube.com/watch?v=tdYlOr5qh-Q

Questions or Support:
Phone: 269-353-1184
Email: info@jcroffroad.com

Step 2 Included Parts



Check that you have all of the parts shown before starting.

Step 3 Included Hardware

Check that you have all of the hardware below before starting:

- 1/4-20 x 1/2 in flat head bolts
- 1/4-20 serrated flange nuts
- 3/4 x 1-1/2 in bolt and 3/4 in washer
- 2 bearings and rubber seal
- 1 in washer and 1 in nut
- Pull pin
- 1/4-20 x 1 in hex bolts and 1/4 in washers
- 1/4-20 x 3/8 in bolt
- 2 rubber bumpers
- 3/8-16 x 1 in bolts and serrated flange nuts
- 1/4-20 x 3/4 in button head bolts

Step 4 Install Pin Track



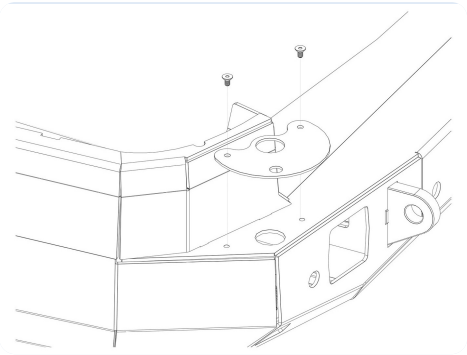

Install the pin track on the side of the bumper where the carrier will go. Line up the holes so the small bolt holes are countersunk, then secure it with the 1/4-20 x 1/2 in flat head bolts and 1/4-20 serrated flange nuts.

Video timestamp: 0:16

Step 5 Install Spindle



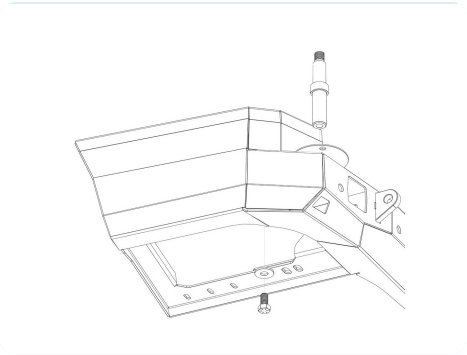

Install the spindle. Put the larger end into the hole on the pin track. Reach around to the back of the bumper from underneath and thread the 3/4 x 1-1/2 in bolt with the 3/4 in washer into the threaded hole in the bottom of the spindle.

Video timestamp: 2:16

Step 6 Grease Bearings



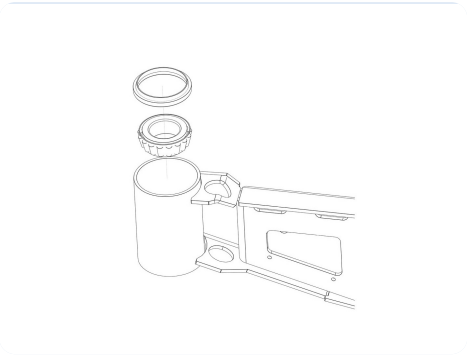

Grease both bearings and the rubber seal (the install video shows how). Flip the carrier door upside down and insert 1 bearing and the rubber seal into the hub. The bearing's smaller end faces down, the seal's softer lip faces up. Tap the seal in with a hammer and screwdriver.

Video timestamp: 3:06

Step 7 Place Carrier



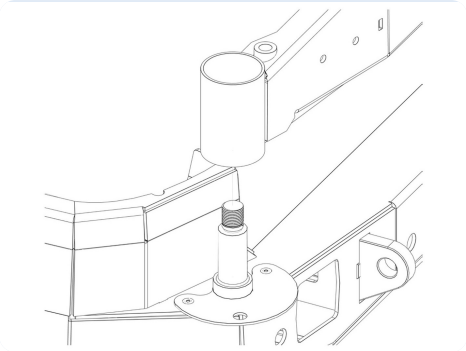

Place the carrier onto the spindle.

Video timestamp: 3:39

Step 8 Install Bearing and Nut



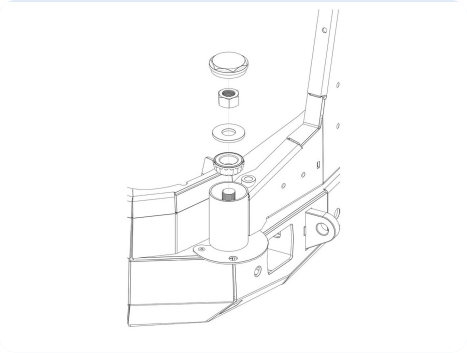

Set the second bearing in place, smaller end down, then add the 1 in washer and thread the 1 in nut onto the spindle. Tighten until there is no wiggle without straining the bearings. Re-adjust after you load gear. Finish by threading the spindle cap onto the hub and tightening it with the provided wrench.

Video timestamp: 3:56

Step 9 Install Pull Pin



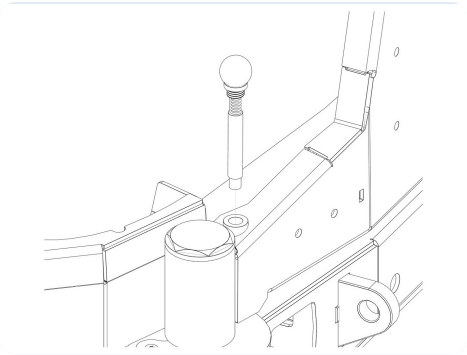

Grease the metal part of the pull pin and screw it into the small round threaded hole beside the hub. Grease it often to keep it from sticking. It locks the carrier in the open position and is not meant to stop a swinging carrier.

Video timestamp: 4:14

Step 10 Mount D-Bracket



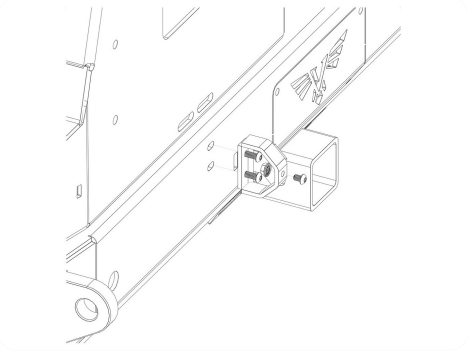

Mount the small D-shaped bracket on the vertical face of the bumper just below the carrier, using the 1/4-20 x 1 in hex bolts, 1/4 in washers and flange nuts. The open end faces the carrier. Leave it loose to adjust later. Put a 1/4-20 x 3/8 in bolt and flange nut through the front hole so the latch has something to hold.

Video timestamp: 5:31

Step 11 Install Latch Mount

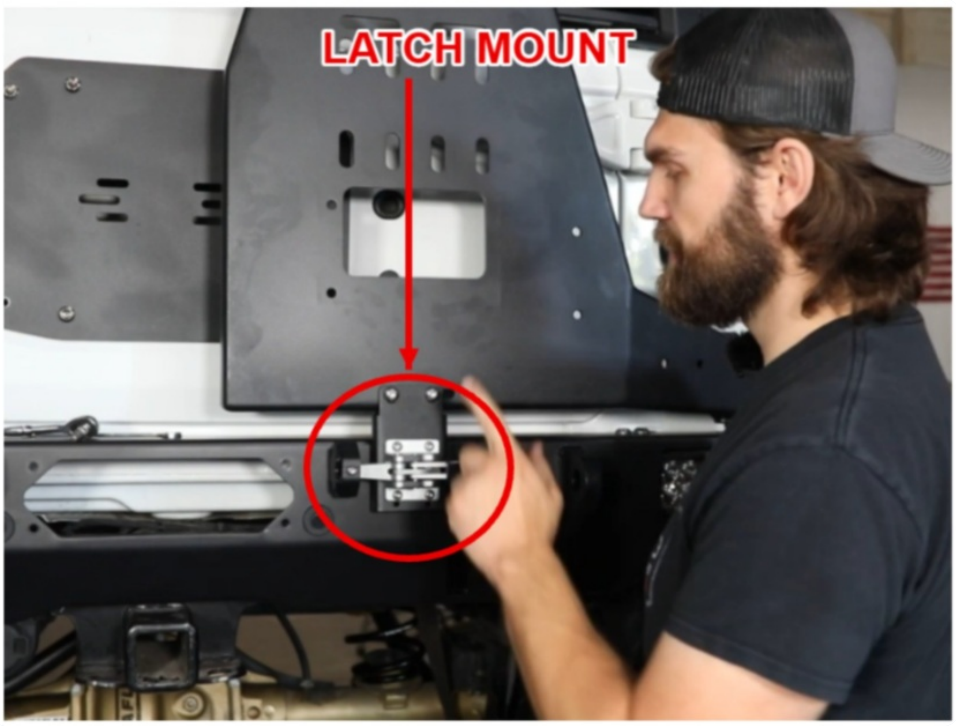

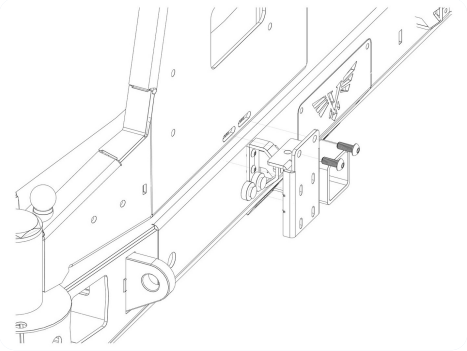

Press the 2 rubber bumpers into the large holes in the latch mount. Install the mount on the carrier with the three 3/8-16 x 1 in bolts and serrated flange nuts, one bolt on the inside of the carrier through the bottom. Keep them loose for now.

Video timestamp: 6:03

Step 12 Install Latch



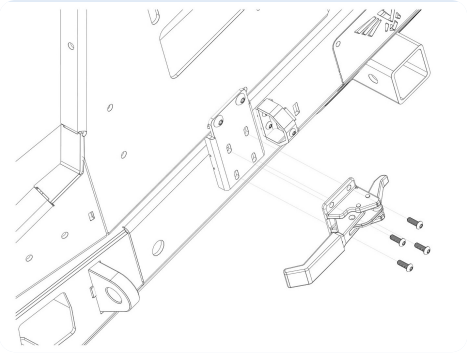

Install the latch on the latch mount with the 1/4-20 x 3/4 in button head bolts and flange nuts. Adjust all the latch parts so the small nut inside the D bracket sits roughly centered on the latch face when latched. Then tighten every loose bolt.

Video timestamp: 6:45

Step 13 Installation Complete



Confirm all hardware is tightened. Congrats! Your installation of the Adventure Carrier is now complete. Enjoy!