Step 1 Upper Rear Shelf Install Instructions





Step by step on how to install the Upper Rear Shelf. Please read all steps carefully before starting the install.

Installation Video: https://www.youtube.com/watch?v=s_P0f6LAg4Q

Questions or Support:
Phone: 269-353-1184
Email: info@victory4x4.com

Step 2 Included Parts

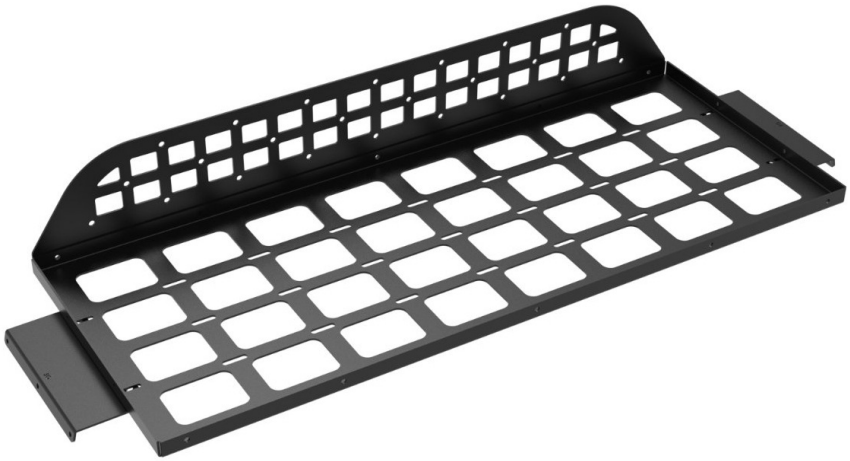

Check that you have all of the parts shown before starting.

Step 3 Included Hardware

046-0103 BOLT PACK

VUPRS-BP • Bill of materials (per 1 bag)

PIECES / BAG 66

BIN	QTY	PART #	DESCRIPTION
1	14 ×	040-0025	1/4-20 SERR FLANGE LOCKNUT GR5 ZNC
2	14 ×	040-0051	1/4-20 x 1/2 BUTTON HD SOC CAP 18-8 SS BLK
3	4 ×	040-0137	M6-1.0 x 25 BUTTON HD SOC CAP 18-8 SS
4	18 ×	040-0147	1/4 MIL-SPEC FLAT WASHER 18-8 SS BLK
5	4 ×	040-0148	1/4-20 x 3/4 BUTTON HD SOC CAP 18-8 SS BLK
6	4 ×	040-0188	M6-1.0 x 35 SOC HD CAP SCREW 18-8 SS
7	4 ×	040-0203	#12 SNAP-IN NYLON NUT
8	4 ×	040-0135	1/4 MIL-SPEC FLAT WASHER 18-8 SS

Set bins out in this order • One bag at a time • Gold = zinc • Black = black finish

Odoo BOM link in description

Check that you have all of the hardware shown before starting (hardware pack 046-0103).

Step 4 Install Mounts



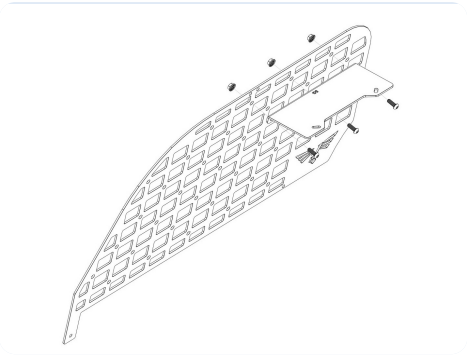

5th gen 4Runner shown; steps are similar for 4th/3rd gen 4Runner, GX 460/470, 100 and 200 Series. Mount the mounts to the Rear Window MOLLE Panels with three 1/4-20 x 3/4 button heads, washers, and flange nuts each. Use the top row of holes, all except the one closest to the hatch.

Step 5 Attach Front Panel

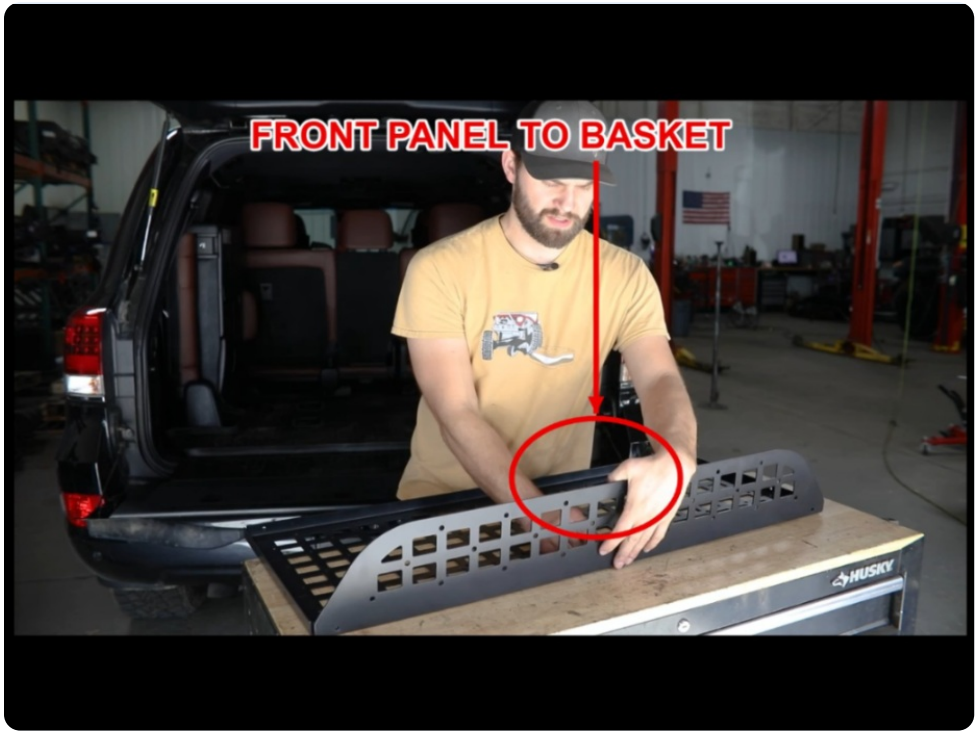

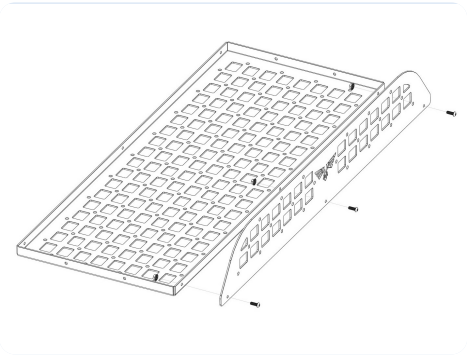

Attach the front panel to the basket with three 1/4-20 x 3/4 button heads, washers, and serrated flange nuts.

Step 6 Mount Basket



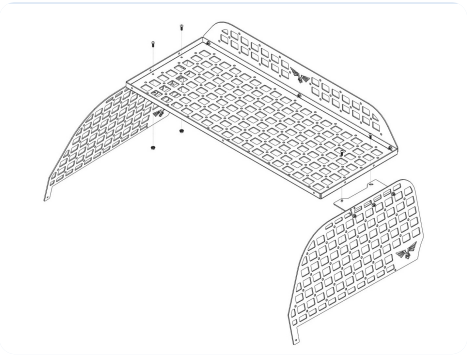

Raise the basket up between the two mounts and attach them together with two button heads, washers, and flange nuts per side. Tighten everything fully.

Step 7 Installation Complete



Confirm all hardware is tightened. Congrats! Your installation of the Upper Rear Shelf is now complete. Enjoy!