Step 1 Ranger Bedside MOLLE Panel Install Instructions





Step by step on how to install the Ranger Bedside MOLLE Panel. Please read all steps carefully before starting the install.

Installation Video: https://www.youtube.com/watch?v=2Ogh8nHHBrw

Questions or Support:
Phone: 269-353-1184
Email: info@jcroffroad.com

Step 2 Included Parts



Materials

	Part	Description	Attribute Set	Qty/Pare
10	040-0129	Off-White Nylon Unthreaded Spacer, 1"		2.00000
20	040-0037	7/16-14 FORGED WING NUT ZNC		2.00000
30	040-0003	9/16 Uss Flat Washer Znc		2.00000
40	040-0023	7/16-14 SERR FLANGE NUT		2.00000
50	040-0128	7/16-14 x 2 1/2 Carriage bolts		2.00000

Check that you have all of the parts shown before starting.

Step 3 Included Hardware

046-0359 BOLT PACK

RG4RMP-BP • Bill of materials (per 1 bag)

PIECES / BAG 81

BIN	QTY	PART #	DESCRIPTION
1	2	040-0137	M6-1.0 x 25 BUTTON HD SOC CAP 18-8 SS
2	4	040-0118	M8-1.25 x 25 FLANGED HEX CAP
3	4	040-0010	3/8-16 x 1 BUTTON HD SOC CAP SS
4	4	040-0026	3/8-16 SERR FLANGE NUT HARD ZNC
5	9	040-0013	5/16-18 x 5/8 BUTTON HD SOC CAP ZNC
6	11	040-0020	5/16-18 SERR FLANGE NUT HARD ZNC
7	9	040-0011	1/4-20 x 3/4 BUTTON HD SOC CAP 18-8 SS
8	9	040-0025	1/4-20 SERR FLANGE LOCKNUT GR5 ZNC
9	2	040-0005	5/16-18 x 3/4 BUTTON HD SOC CAP 18-8 SS
10	5	040-0163	M10-1.25 x 30 FLANGED HEX CAP
11	11	040-0135	1/4 MIL-SPEC FLAT WASHER 18-8 SS
12	11	040-0138	5/16 (M8) MIL-SPEC FLAT WASHER 316 SS

Set bins out in this order • One bag at a time • Gold = zinc • Black = black finish

Odoo BOM link in description

Check that you have all of the hardware shown before starting.

Step 4 Assemble Panels



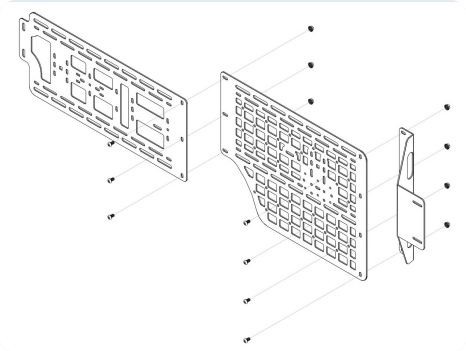

Loosely attach the two panels and the rear bracket with 5/16-18 x 5/8 button heads and serrated flange nuts. The front panel sits toward the inside, the rear panel sits between the front panel and the bracket. Both bottom cutouts (large and curved) face down.

Video timestamp: 1:05

Step 5 Install Bottom Mount

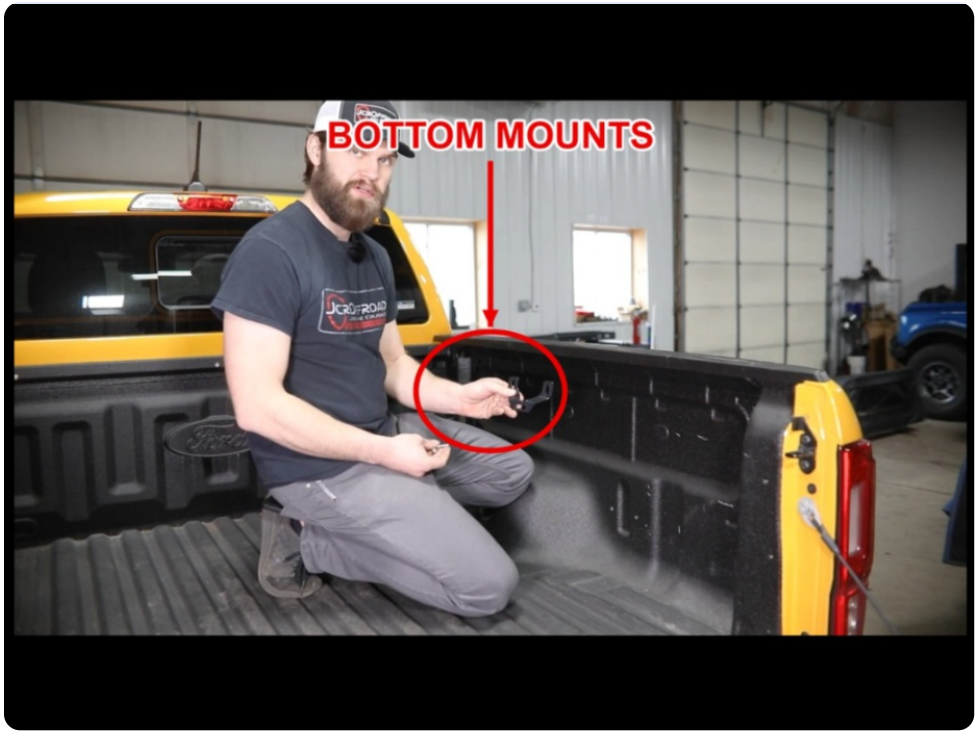

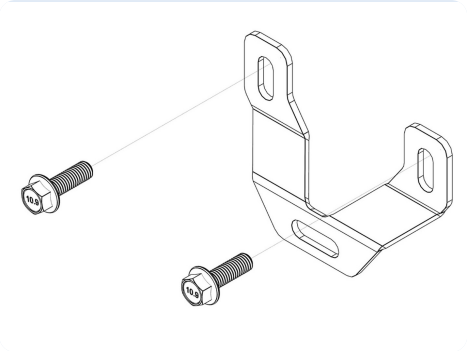

Install the bottom mount into the factory threaded holes with the M8 bolts, horizontal slot toward the ground. With a spray-in bedliner, tap the holes with an M8 x 1.25mm tap first.

Video timestamp: 2:23

Step 6 Assemble Upper Mounts



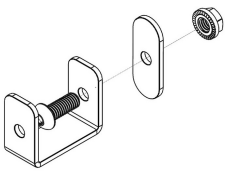

Loosely assemble the upper mounts as shown. Remove the plastic plugs from the bedside and insert the flat washer into each exposed hole. With the washer sitting vertically, lightly pull out on the rectangular bracket and tighten it in place.

Video timestamp: 3:46

Step 7 Mount Panels



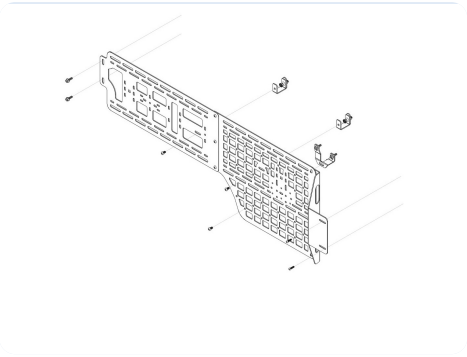

Mount the panels to the bedside and mounts. The front and back attach directly to the bedside with M8 and M6 bolts (tap the holes if you have bedliner). The mounts attach to the panels with 5/16-18 button heads and flange nuts. Tighten everything.

Video timestamp: 5:23

Step 8 Installation Complete



Confirm all hardware is tightened. Congrats! Your installation of the Ranger Bedside MOLLE Panel is now complete. Enjoy!