Step 1 Gladiator Bed Front MOLLE Panel Install



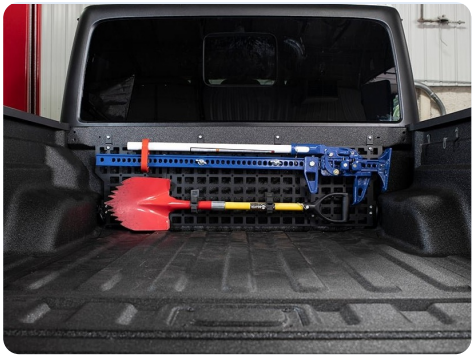

Step by step on how to install the Gladiator Bed Front MOLLE Panel. Please read all steps carefully before starting the install.

Installation Video: https://www.youtube.com/watch?v=8bHxRKkWILg

Questions or Support:
Phone: 269-353-1184
Email: info@jcroffroad.com

Step 2 Included Parts

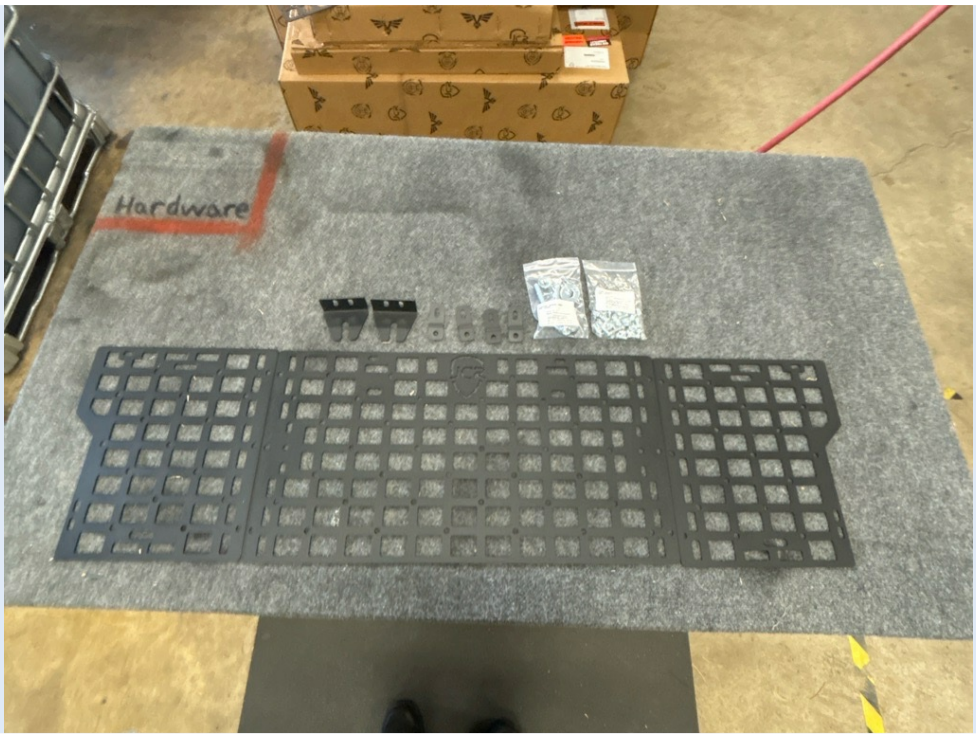

Check that you have all of the parts shown before starting.

Step 3 Included Hardware

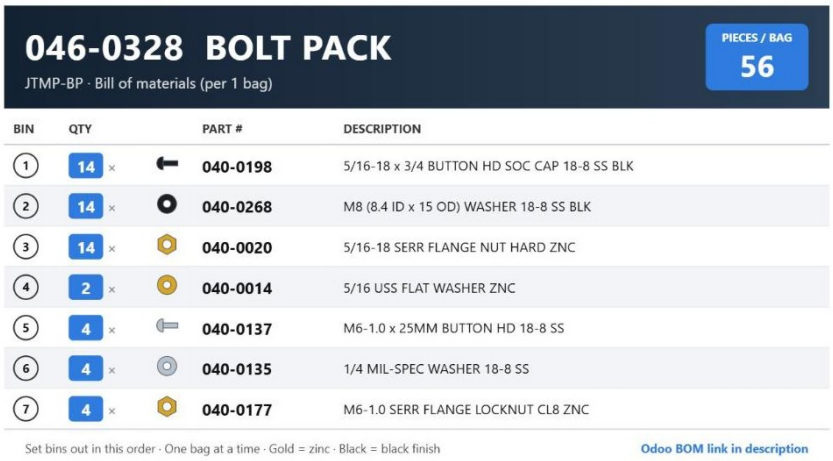

046-0328 BOLT PACK

JTMP-BP · Bill of materials (per 1 bag)

PIECES / BAG 56

BIN	QTY	PART #	DESCRIPTION
1	14 ×	040-0198	5/16-18 x 3/4 BUTTON HD SOC CAP 18-8 SS BLK
2	14 ×	040-0268	M8 (8.4 ID x 15 OD) WASHER 18-8 SS BLK
3	14 ×	040-0020	5/16-18 SERR FLANGE NUT HARD ZNC
4	2 ×	040-0014	5/16 USS FLAT WASHER ZNC
5	4 ×	040-0137	M6-1.0 x 25MM BUTTON HD 18-8 SS
6	4 ×	040-0135	1/4 MIL-SPEC WASHER 18-8 SS
7	4 ×	040-0177	M6-1.0 SERR FLANGE LOCKNUT CL8 ZNC

Set bins out in this order · One bag at a time · Gold = zinc · Black = black finish

Odoo BOM link in description

Check that you have all of the hardware shown before starting.

Step 4 Assemble Panels

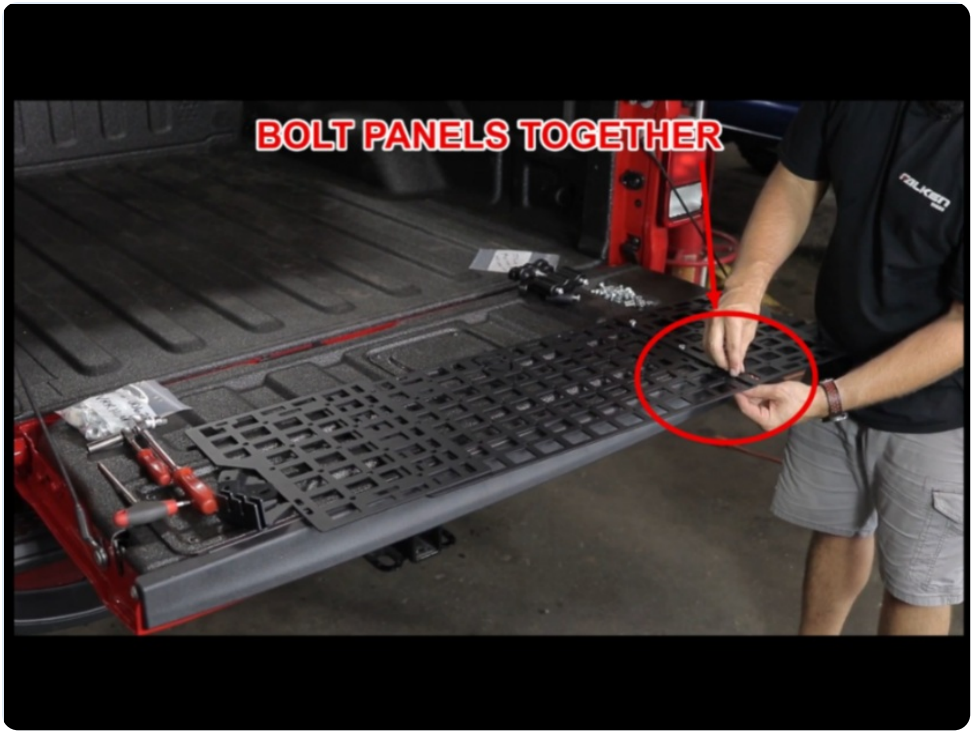

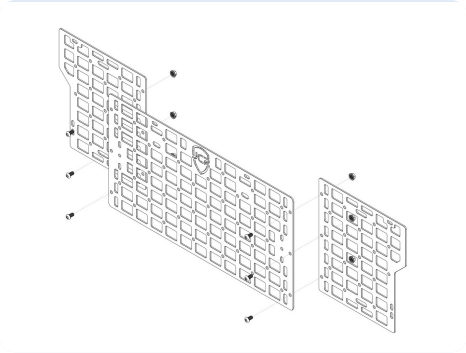

Attach the MOLLE panels together with 5/16-18 x 5/8 in bolts and serrated flange nuts. Either panel can go on top. Flip the middle panel so the JCR logo reads correctly, and flip the side panels so the cutout is at the outside bottom corners. Attach any mounts you plan to use now, since the back is hard to reach later.

Video timestamp: 1:52

Step 5 Attach Side Mounts



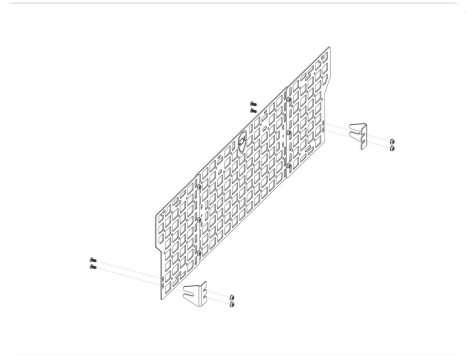

Loosely attach the side mounts to the back of the side panels with 5/16-18 x 5/8 in bolts and flange nuts. The side with 2 slots goes against the panel back, and the side with 1 slot points toward the tailgate. Remove the small swiveling tie down rings near the front of the bed on both sides, to be used later.

Video timestamp: 2:49

Step 6 Mount Top Mounts



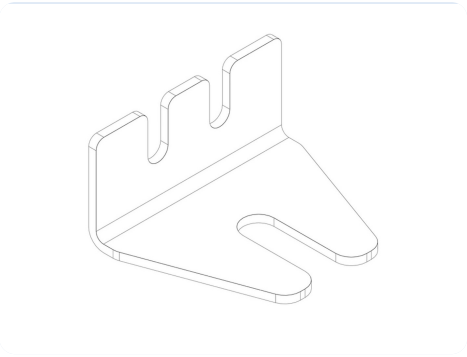

Loosely mount the 4 top mounts to the holes in the front of the bed. Without the trail rail, fasten them with the provided 25mm M6 bolts. With the trail rail, remove it and reinstall it with one mount behind each of its 4 holes, using the factory hardware. The slotted end bolts into the bed.

Video timestamp: 7:22

Step 7 Mount Panel

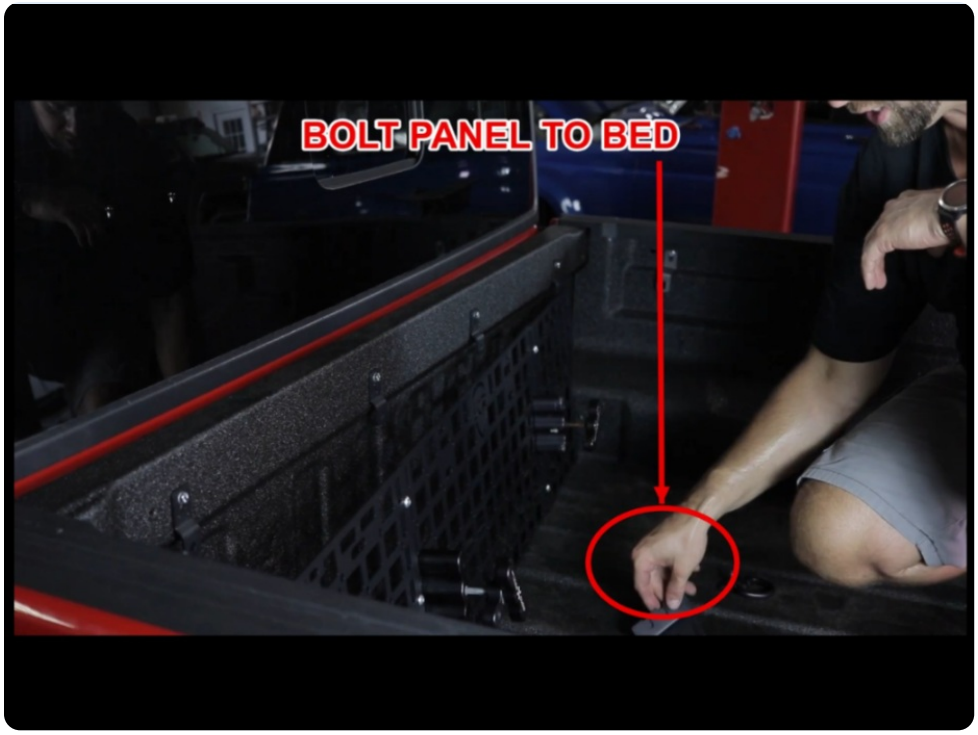

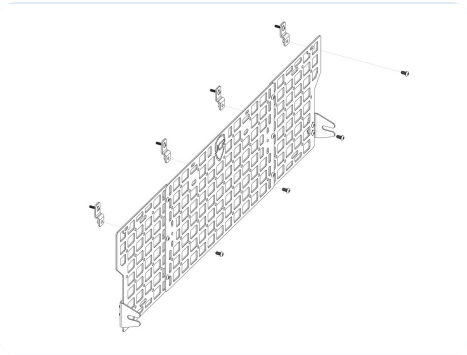

With the brackets in place, loosely mount the MOLLE panel to them with 5/16-18 x 5/8 in bolts and serrated flange nuts.

Video timestamp: 8:13

Step 8 Reinstall Tie Downs



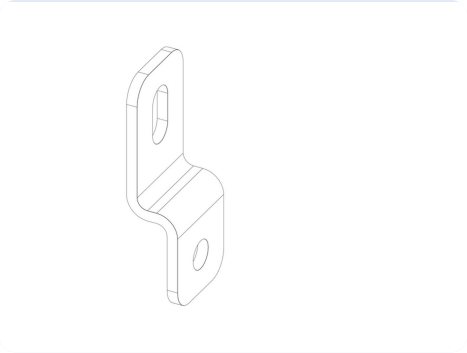

Reinstall the tie down rings, with the side mounts sandwiched between the washer on the tie down bolt and the bed. Leave them loose for now.

Video timestamp: 9:00

Step 9 Position and Tighten



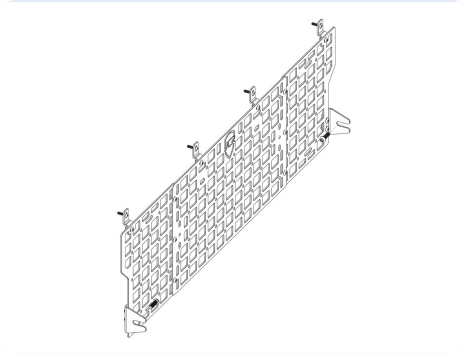

With everything roughly in place, position the panels where you want them and tighten all the loose bolts. Keep the panels as close to vertical as possible.

Video timestamp: 10:12

Step 10 Installation Complete

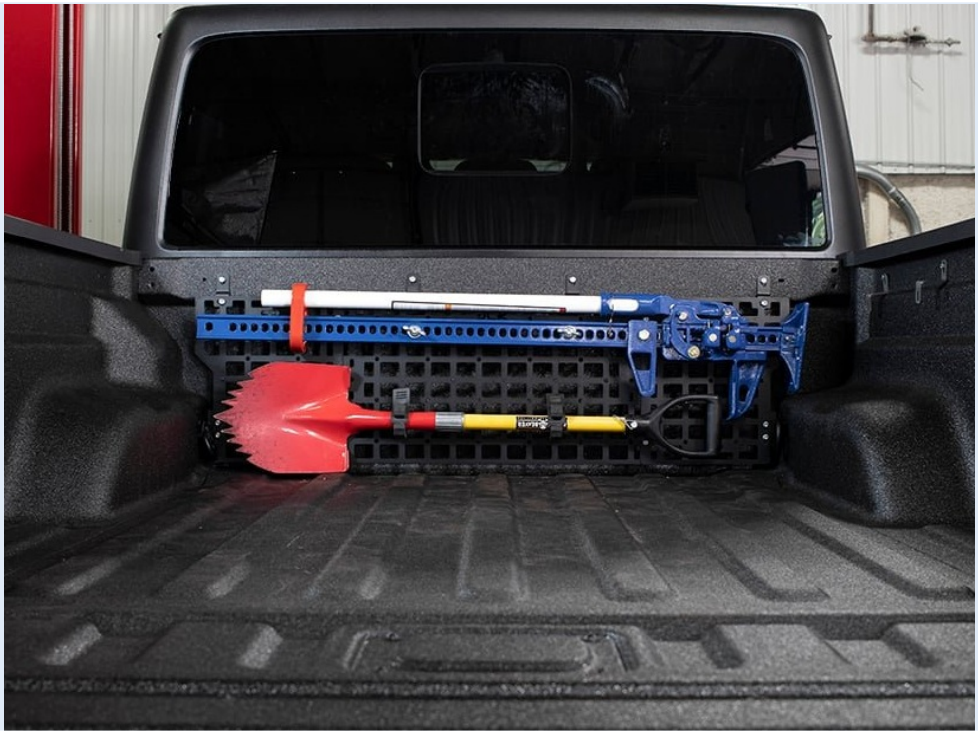

Confirm all hardware is tightened. Congrats! Your installation of the Gladiator Bed Front MOLLE Panel is now complete. Enjoy!