Step 1 GX470 DIY Rear Bumper Install Instructions





Step by step on how to install the GX470 DIY Rear Bumper. Please read all steps carefully before starting the install.

Questions or Support:
Phone: 269-353-1184
Email: info@victory4x4.com

Step 2 Included Parts



Check that you have all of the parts shown before starting.

Step 3 Included Hardware

Check that you have all of the hardware from bolt pack 046-0179 before starting.

Step 4 Bend Parts

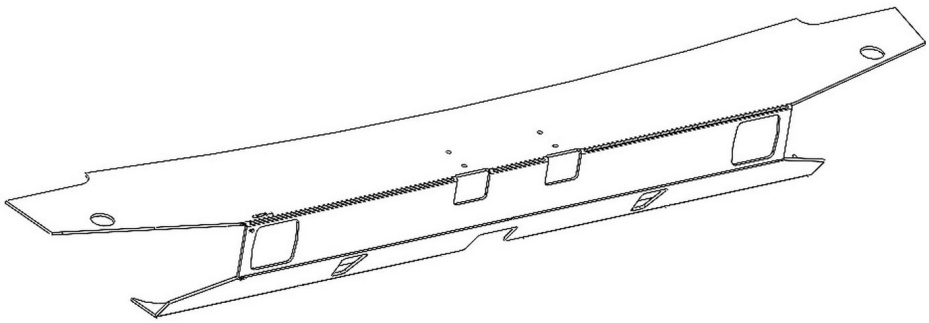

GX470 rear bumper. Each bend angle is etched on its part along the slit lines. Bend all parts to the called out angles. Parts marked L&R are lefts and rights and must end up as mirror images of each other.

Step 5 Tack Shell

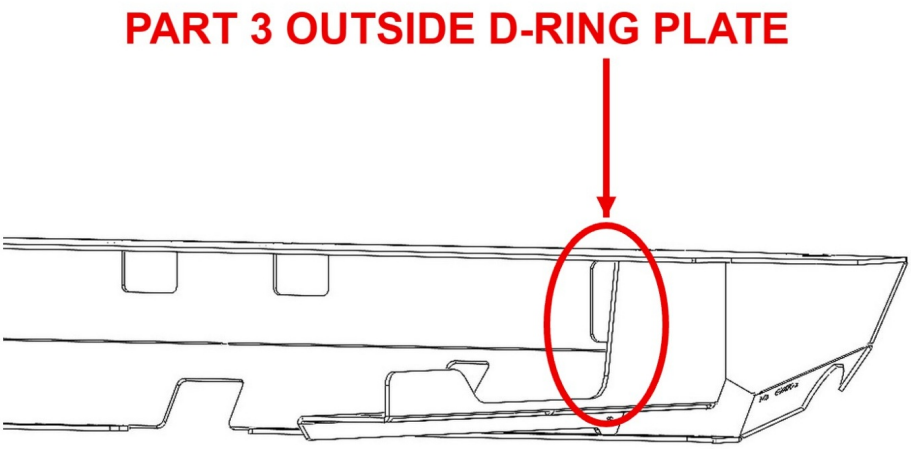

Tack weld and assemble parts 1, 2, and 3 on both sides, aligning part 3 to the outside of the D-ring cutout. Keep everything square to one another.

Step 6 Test Fit Shell

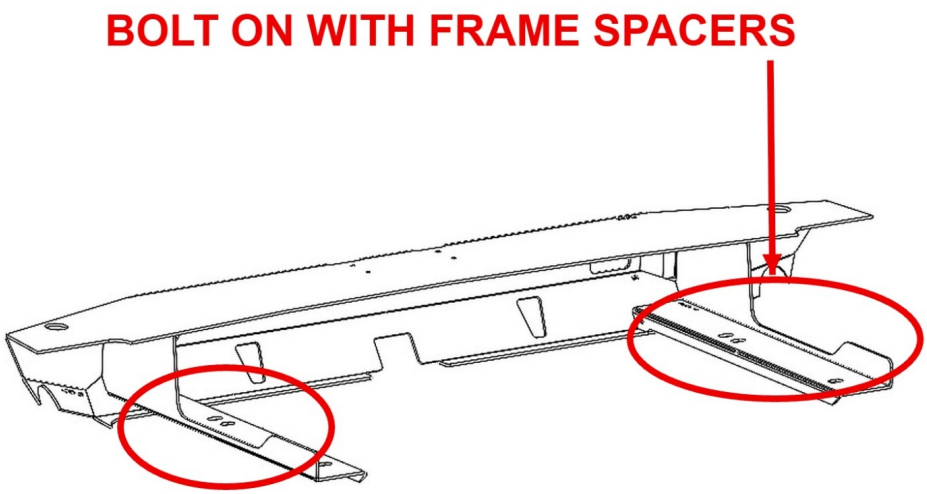

Loosely bolt the tacked center section shell onto the truck with the frame spacers, centered on the slots, and snug the bolts.

Step 7 Tack Wings

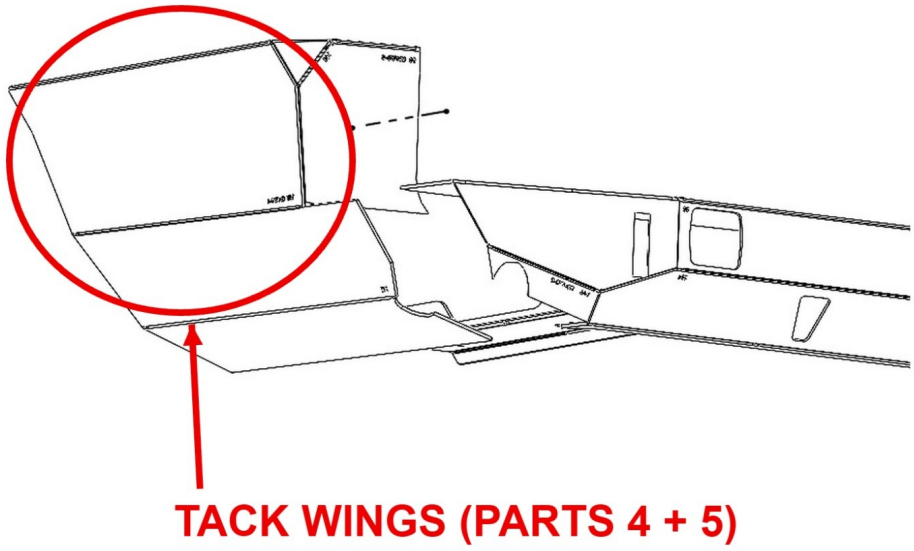

Tack each pair of wing parts 4 and 5 together first, then tack both sets to the shell while it is on the truck.

Step 8 Tack Remaining Parts

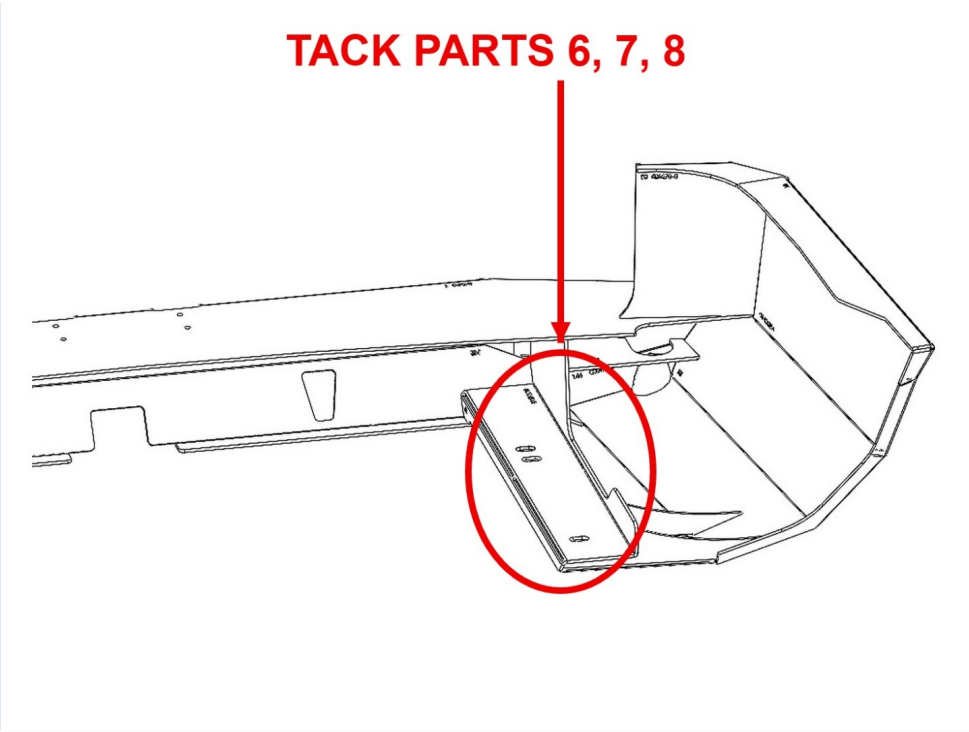

With the shell fully tacked, take the bumper back off the truck. Tack parts 6, 7, and 8 into place on the inside of the bumper on both sides.

Step 9 Weld Seams

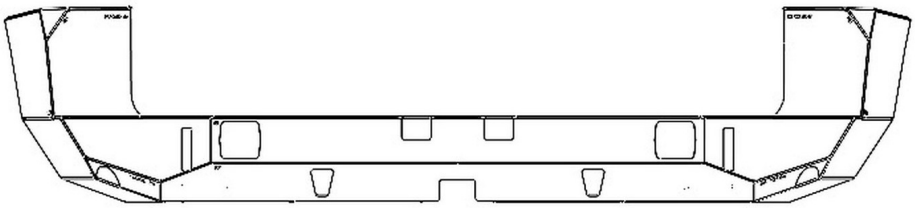

Fully weld the seams. Heat can warp the bumper, so weld some of it while mounted on the vehicle. If you remove it, jump between locations to spread the heat, and clamp a rigid straight edge across the top of the wings.

Step 10 Weld Cube Light Mounts

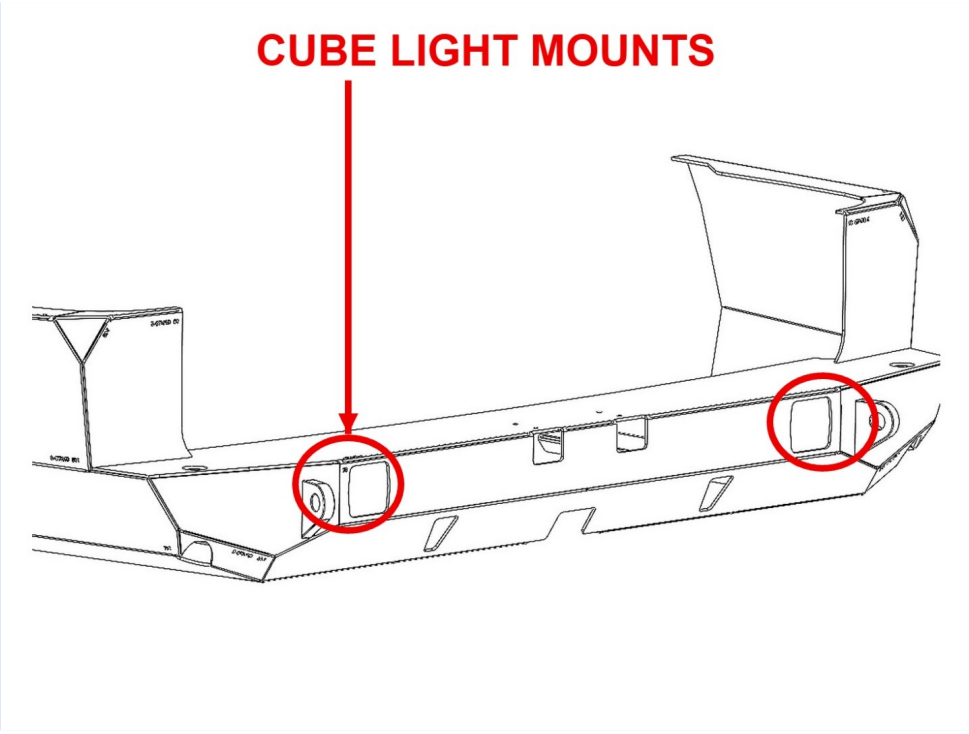

Pick your cube lights to set the mount height, then weld the mounts centered under the cube light cutouts on each side. With the bumper still off, insert the D-ring shackles through the back, square them up, tack them, then fully weld them down.

Step 11 Weld Spindle Sleeves

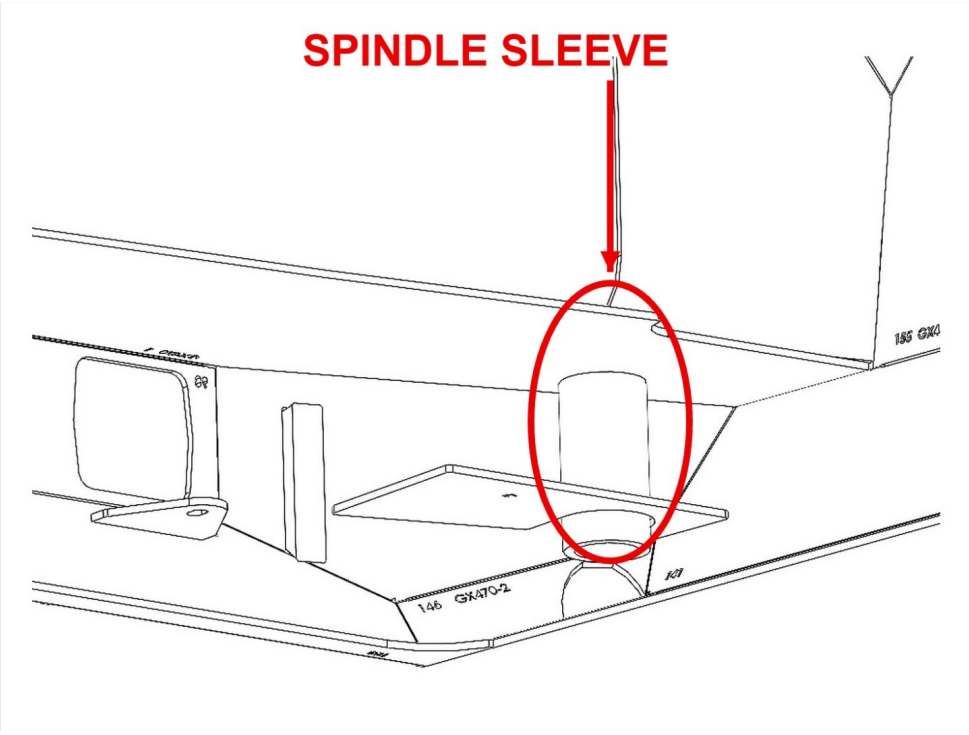

If you plan to run a carrier, weld the spindle sleeves in on both sides. Set the top face of each sleeve flush to the underside of the bumper with its hole concentric to the spindle hole cutout.

Step 12 Final Check



Your DIY bumper is built. Wire the cube lights of your choosing and customize as you like. Check Victory4x4.com for the matching DIY carrier and other GX470 products.

Step 13 Installation Complete



Confirm all hardware is tightened. Congrats! Your installation of the GX470 DIY Rear Bumper is now complete. Enjoy!