Step 1 Bronco Hardtop Short Roof Rack Install





Step by step on how to install the Bronco Hardtop Short Roof Rack. Please read all steps carefully before starting the install.

Installation Video: https://www.youtube.com/watch?v=ebprkKV13Sk

Questions or Support:
Phone: 269-353-1184
Email: info@jcroffroad.com

Step 2 Included Parts & Hardware

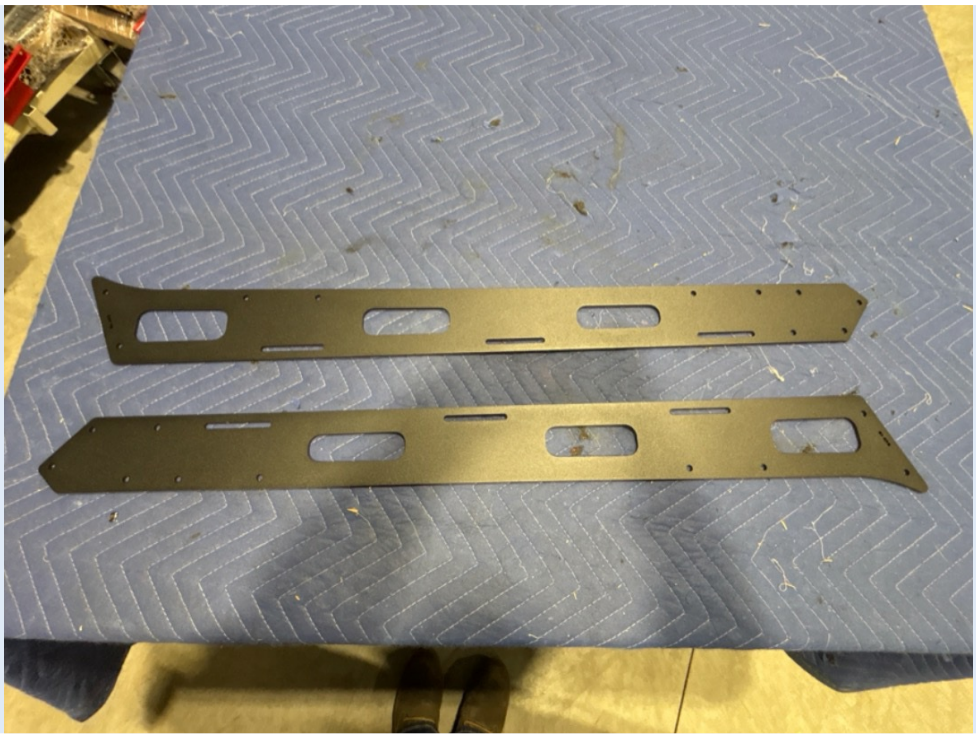

Check that you have all of the parts and hardware shown before starting.

Step 3 Mount Crossbars



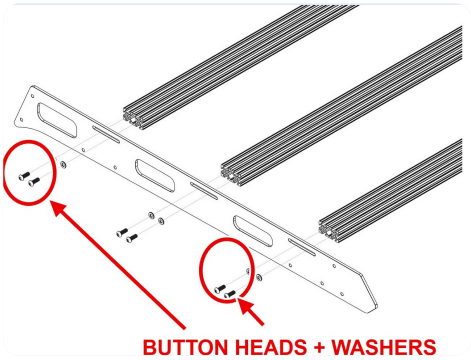

Mount three crossbars between the side rails with 1/4-20 x 3/4 inch button head bolts and two 1/4 inch washers per bar per side, keeping the machined slot facing up so you can add t-nuts later. The 2 door short rack uses four crossbars.

Video timestamp: 0:31

Step 4 Rubber Inner Mounts



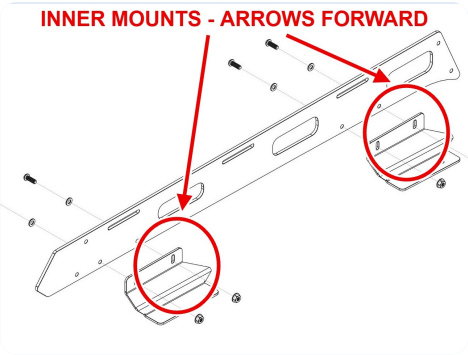

Apply a rubber sheet to the bottom of each inner mount (the sharper angled ones labeled M and R) so it hugs the bracket. Loosely bolt them to the inside of the side rails with 3/4 inch button heads, washers, and serrated flange nuts, R toward the rear and M toward the front with the arrows pointing forward. Then set the rack on the hard top with each mount in its indentation.

Video timestamp: 3:48

Step 5 Rubber Outer Mounts



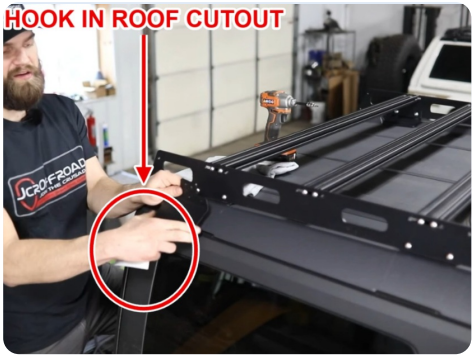

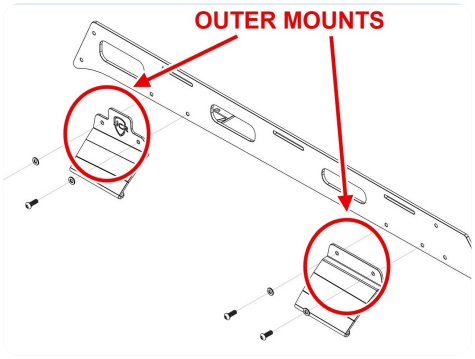

Rubber the outer mounts, covering the top of the hook flange, then swap them in for the inner mounts one at a time with a rag under the free corner. The hook flange slides into the hard top cutouts above the windows. Tighten everything, pushing the inner mounts tight to the roof.

Video timestamp: 7:17

Step 6 Installation Complete



Confirm all hardware is tightened. Congrats! Your installation of the Bronco Hardtop Short Roof Rack is now complete. Enjoy!